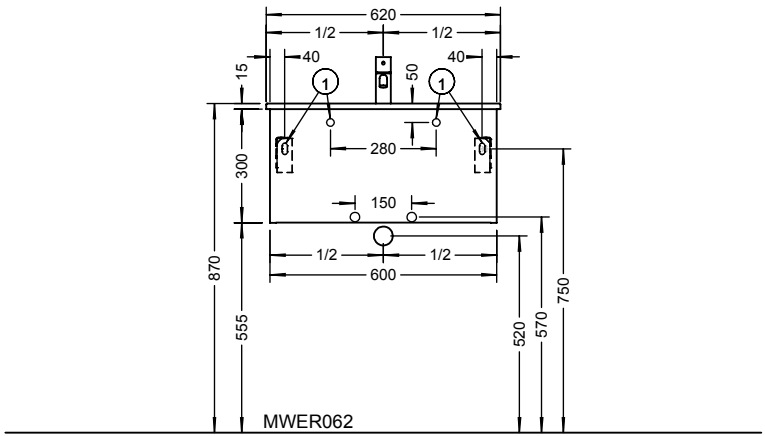

MWER062
WVTV060
WVTV06T